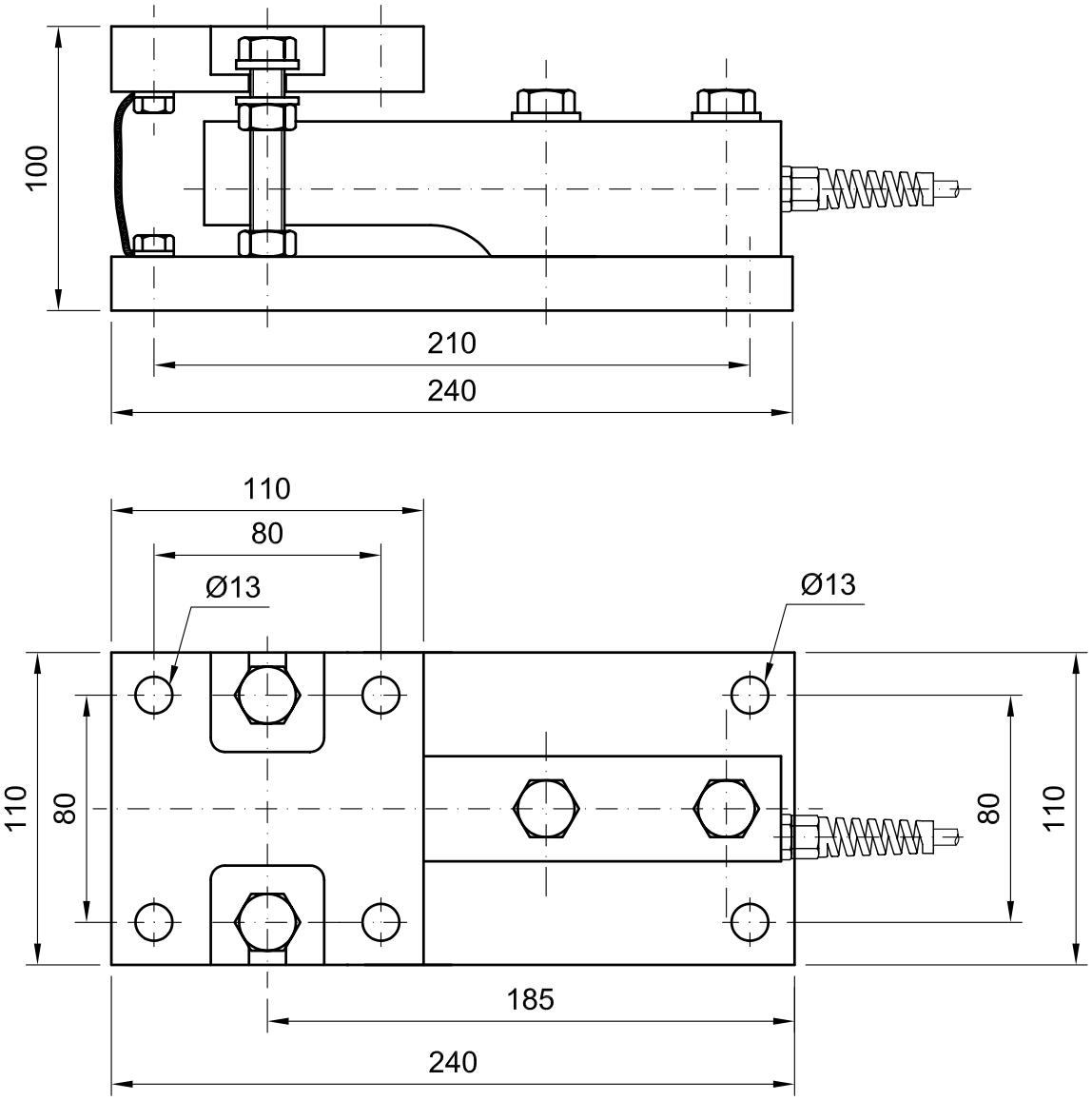

DRAWN BY: Ş.AYDIN								
CONTROL: V.AKGÜN								
REVISION							DATE	
A	B	C	D	E	F	G	27/10/2008	

ESİT® LTD.

www.esitscale.com

DESCRIPTION

BRAND :ESİT
MODEL :SSB-TM 1-2T